SAMSUNG CONFIDENTIAL
THIS DOCUMENT CONTAINS CONFIDENTIAL
PROPRIETARY INFORMATION THAT IS
SAMSUNG ELECTRONICS CO'S PROPERTY.
DO NOT DISCLOSE TO OR DUPLICATE FOR OTHERS
EXCEPT AS AUTHORIZED BY SAMSUNG.

SM-A716U (SM7250)

SM-A716U/U1
Common

REV 0.5 2020.03.31.

Sheet01 : GSM / WCDMA / LTE / NR(N41) RF
Sheet02 : TRANSCEIVER, SUB ANT
Sheet03 : CONNECTIVITY(BT/WIFI/FM), NFC
Sheet04 : AP(SM7250-INTERFACE,GPIO)
Sheet05 : AP(POWER), MEM(uMCP)
Sheet06 : PMIC(PM7250,PM7250A), IF PMIC
Sheet07 : AUDIO Codec, SENSOR, SIM, SD
Sheet08 : CAMERA, DISPLAY PMIC
Sheet09 : DISPLAY, C2C

Engineer:
Drawn by:
R&D CHK:
DOC CTRL CHK:
MFG ENGR CHK:
QA CHK:
TITLE: SM-A716U
Size:
REV
Drawing Number:
Page:
Changed by: user33
Date Changed:
Time Changed:

SAMSUNG CONFIDENTIAL
THIS DOCUMENT CONTAINS CONFIDENTIAL
AND PROPRIETARY INFORMATION OF
SAMSUNG ELECTRONICS CO. LTD. PROPERTY.
DO NOT DISCLOSE TO OR DUPLICATE FOR OTHERS
EXCEPT AS AUTHORIZED BY SAMSUNG.

MAIN ANT RECEPTABLE

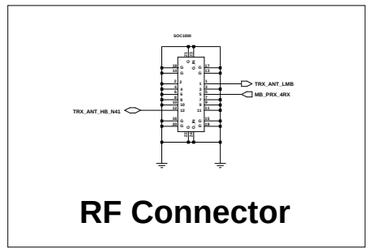

RF Connector

HB PA

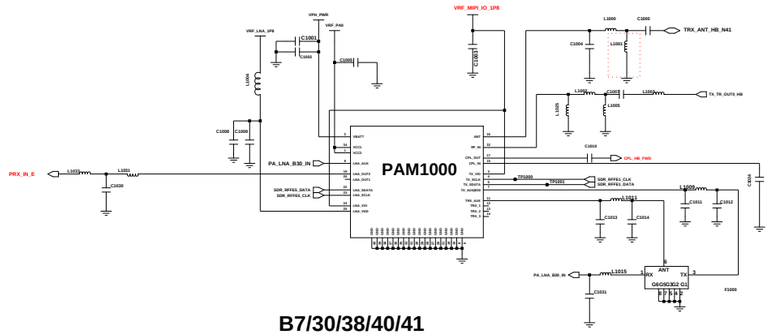

B7/30/38/40/41

MAIN ANT1 LB/MB/B21
(GSM, TDSCDMA B34/39, B1/2/3/4/5/8/12/13/17/18/19/20/25/26/28/32/66, TDD 39)

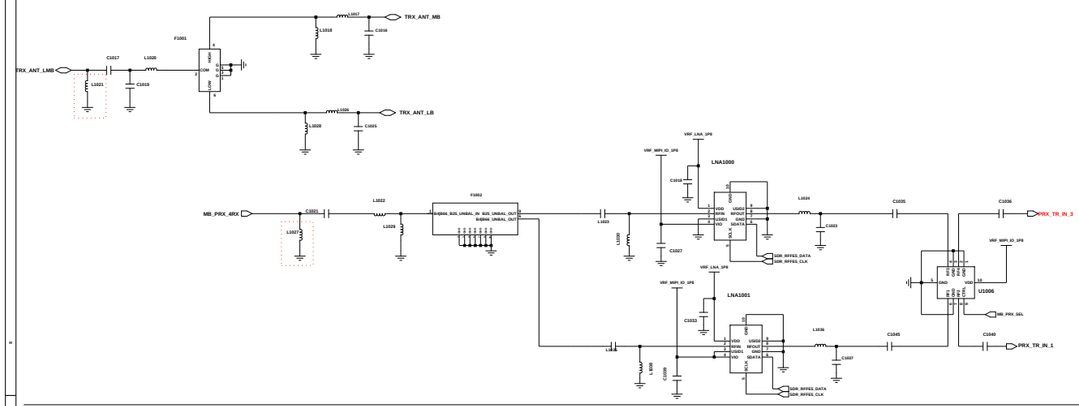

LMB LFEMiD
(B1/2/3/4/5/8/12/13/14/20/25/26/28/29/39/66/71, CDMA, GSM)

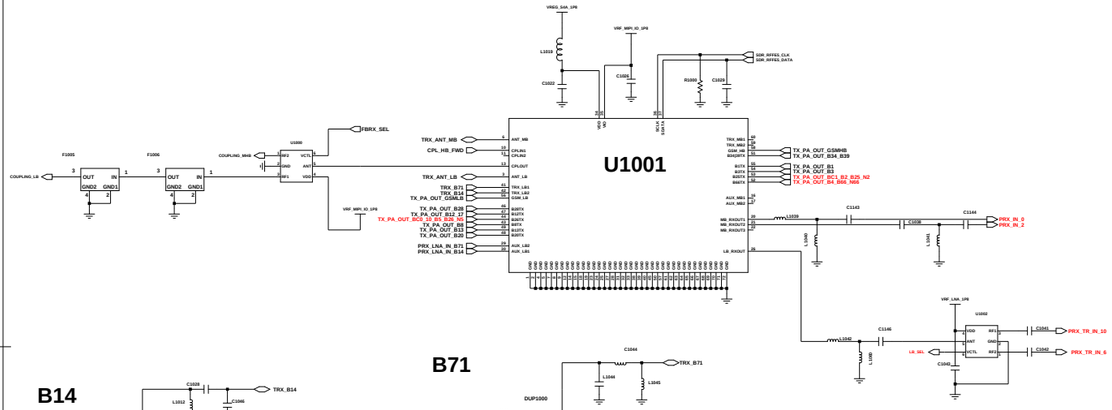

B71

B14

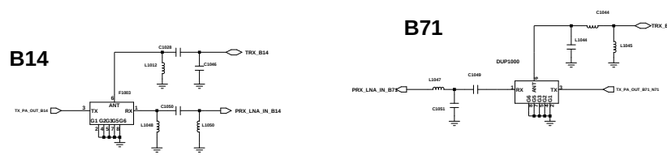

MMMB

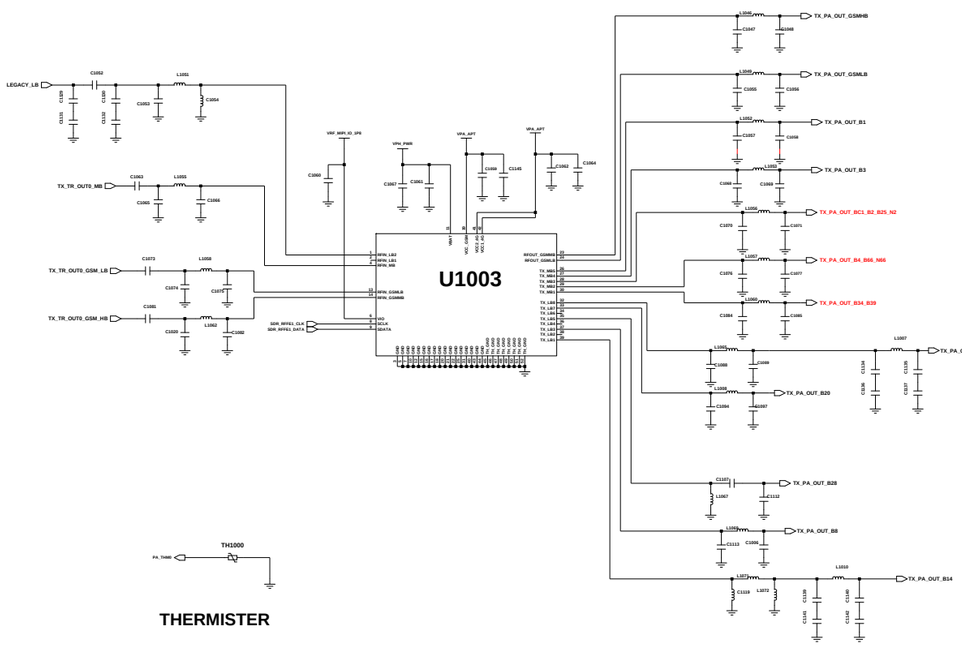

THERMISTER

SUB6_N41_FDD_NR_MMMB

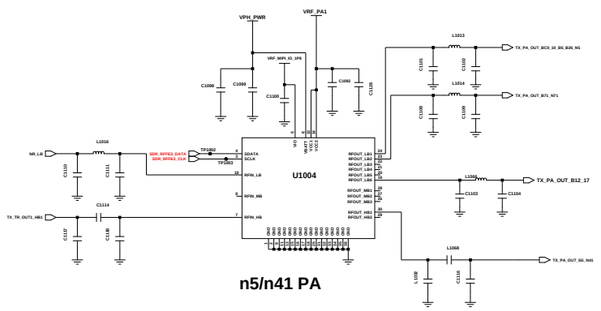

n5/n41 PA

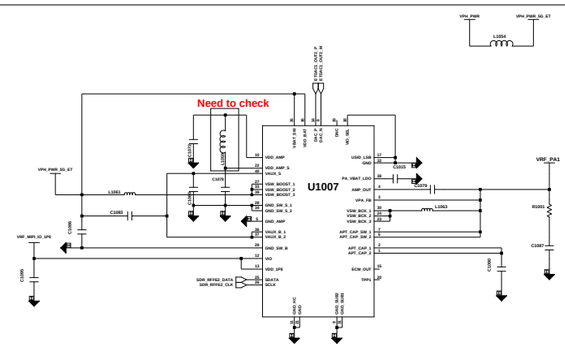

5G ET Modulator

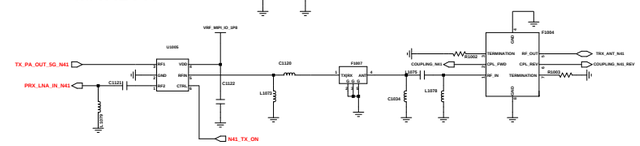

Engineer:	
Design Sp:	
R&D Chk:	
DOC CTRL Chk:	
MFG ENGR Chk:	
TITLE:	SM-A716U
SIZE:	
Q/A Chk:	
REV:	
Drawing Number:	

Changed by	Date Changed	Time Changed

SAMSUNG CONFIDENTIAL
THIS DOCUMENT CONTAINS CONFIDENTIAL
AND PROPRIETARY INFORMATION OF
SAMSUNG ELECTRONICS CO. LTD. PROPERTY.
DO NOT DISCLOSE TO OR DUPLICATE FOR OTHERS
EXCEPT AS AUTHORIZED BY SAMSUNG.

TRANSCEIVER(SDR865)

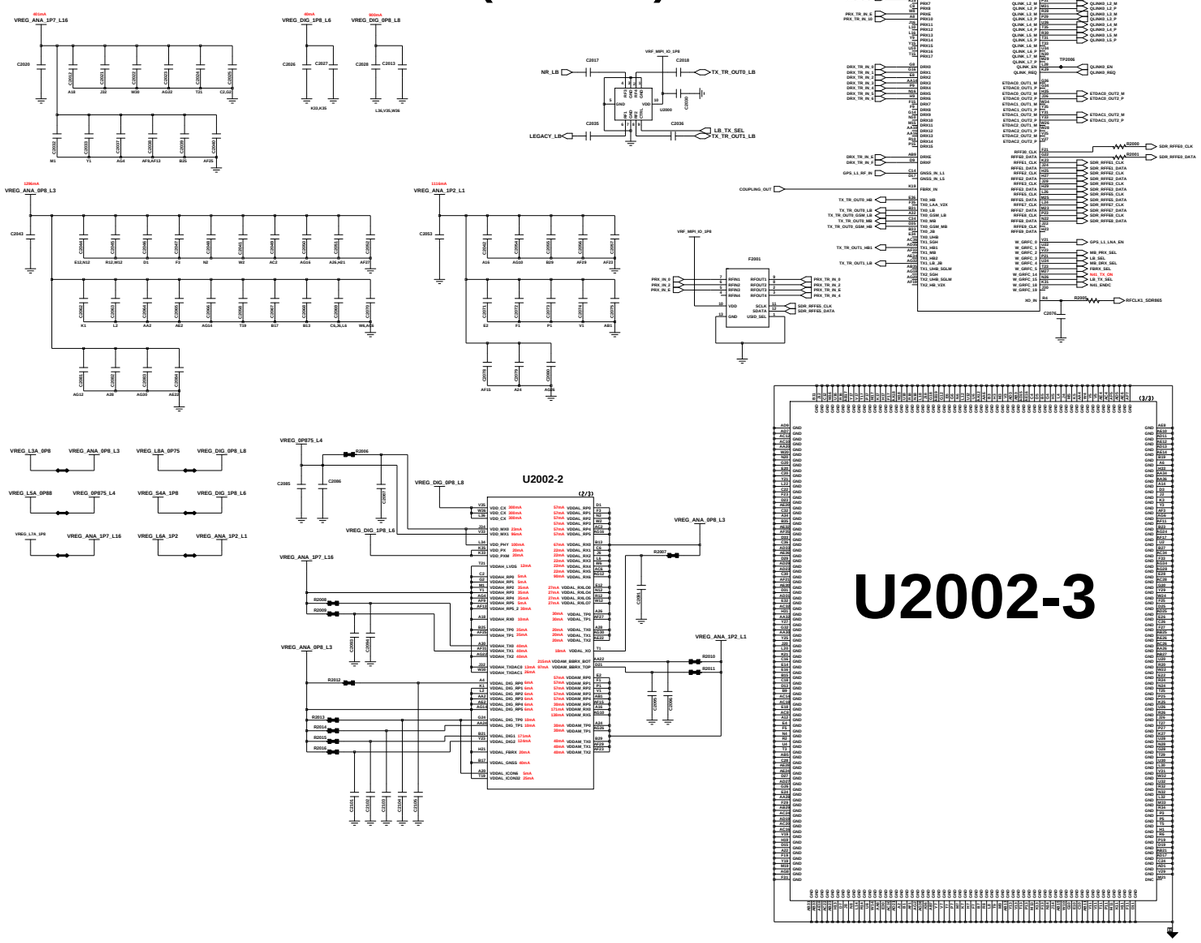

SUB ANT

SUB ANT1
(LB / N41)

DRX_LB
(B5/8/12/13/17/20/26/28_G850/900)

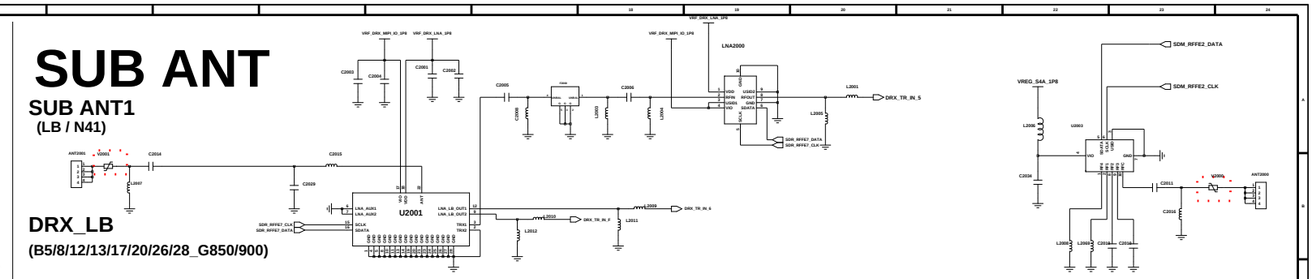

SUB ANT2
(MHB / GPS L1 / N41)

DRX_MHB
(B1/2/3/4/7/38/40/41/66_DCS/PCS)

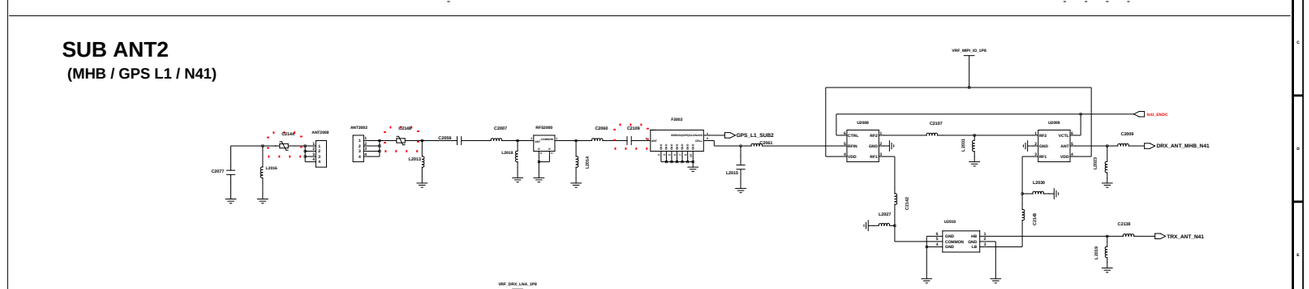

SUB ANT3
(N41)

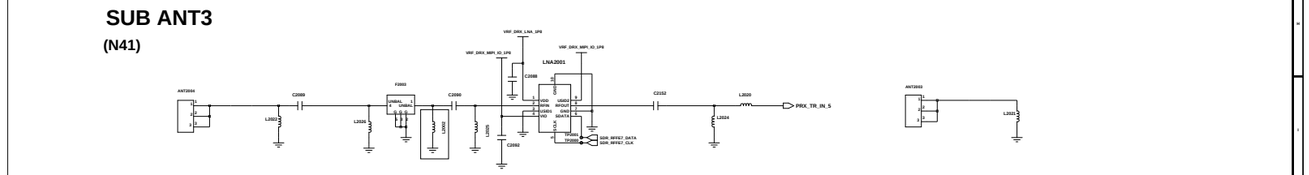

LTE ET Modulator

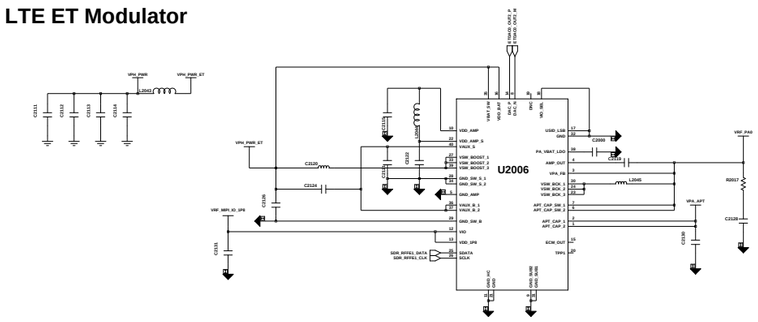

SUB ANT4
(MB)

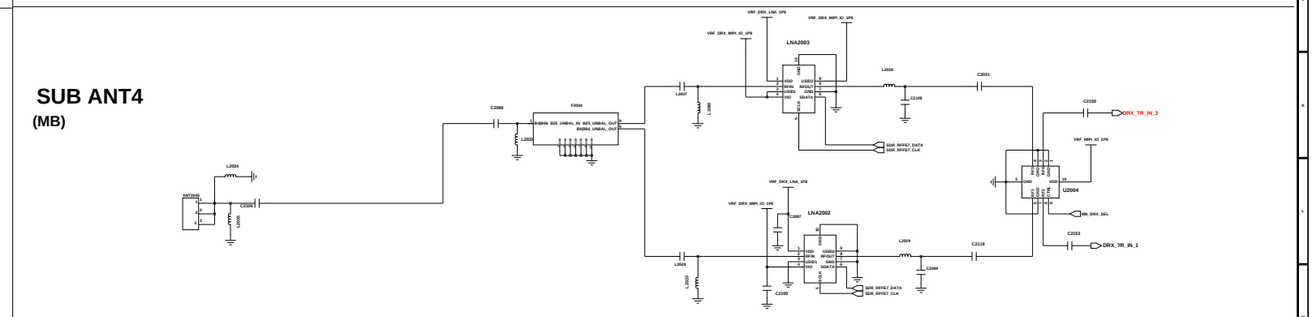

GPS

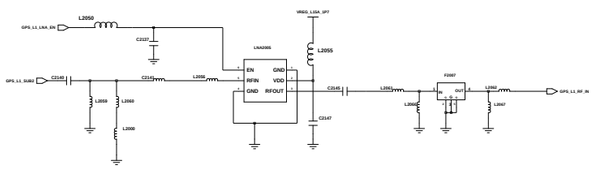

COUPLING SW

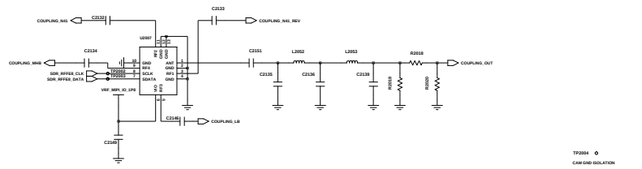

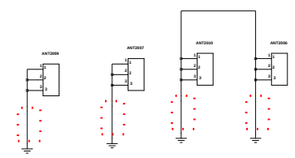

Engineer:	
Design by:	
Approved:	TITLE: SM-A716U
DCL Chk. Date:	
SPE Approval Date:	
Changed by:	Date Changed:
Time Changed:	Q/A Date:
REV:	Drawing Number:

SAMSUNG CONFIDENTIAL
THIS DOCUMENT CONTAINS CONFIDENTIAL
PROPRIETARY INFORMATION THAT IS
SAMSUNG ELECTRONICS CO'S PROPERTY.
DO NOT DISCLOSE TO OR DUPLICATE FOR OTHERS
EXCEPT AS AUTHORIZED BY SAMSUNG.

WIFI/BT/FM

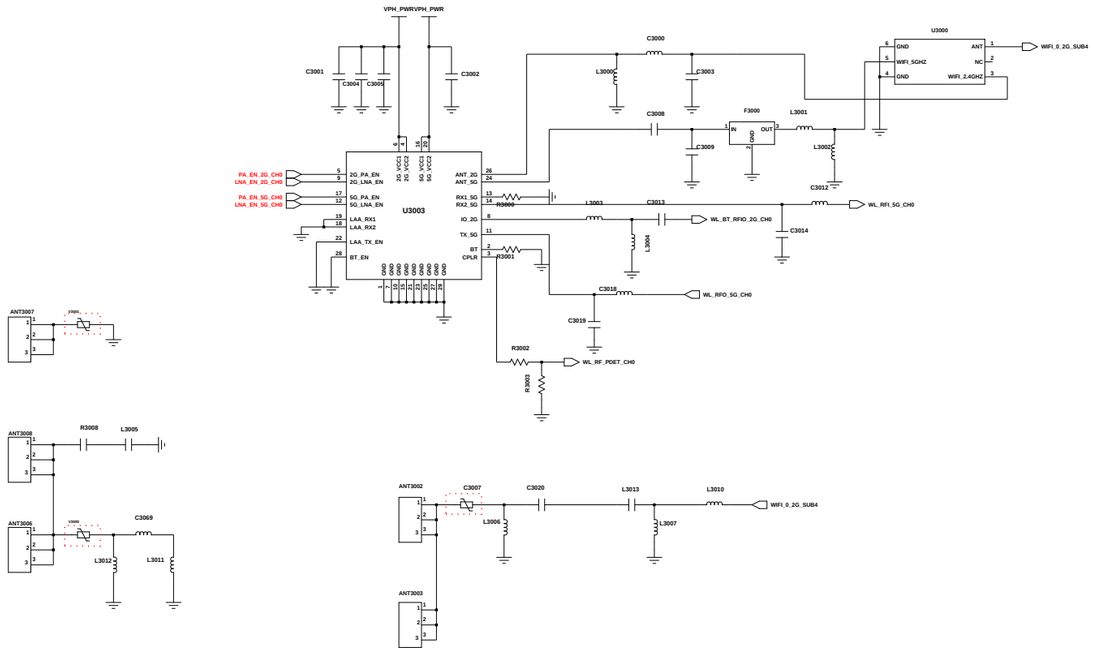

MST

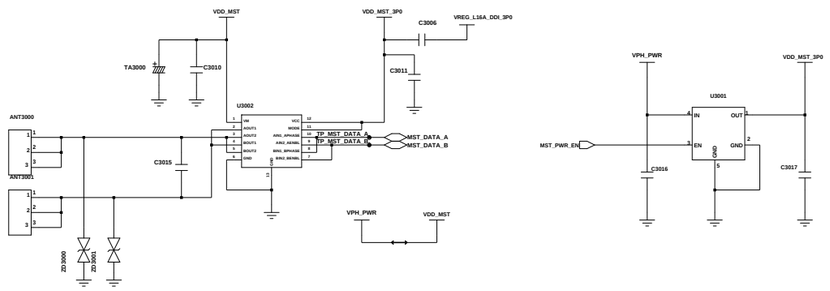

NFC

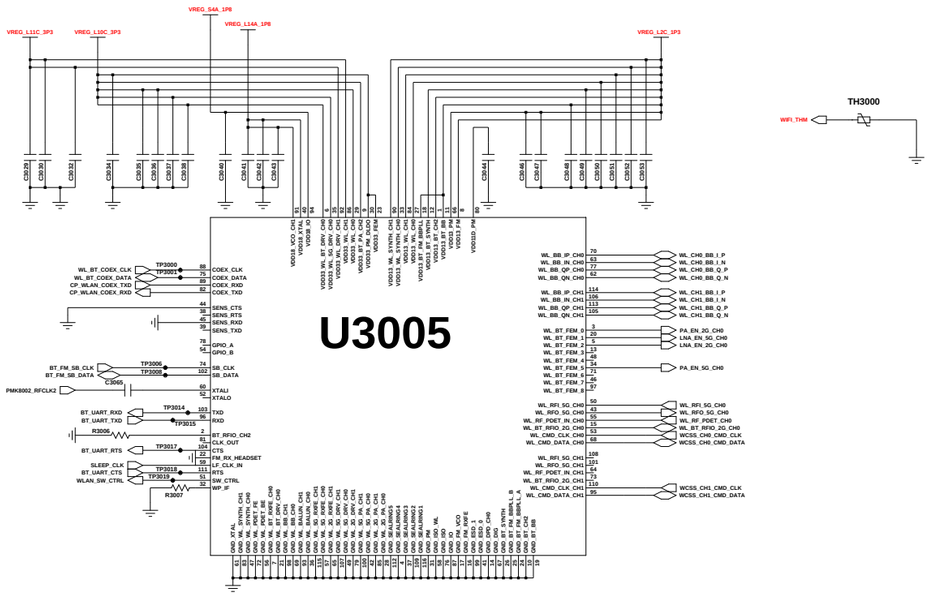

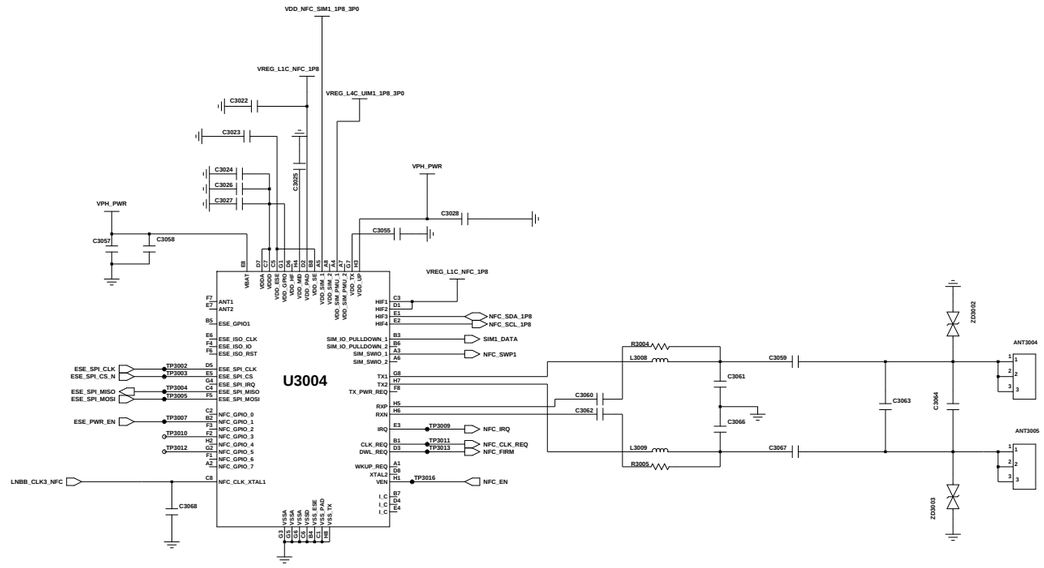

eSE : PN80T
UICC : PN553

Engineer:	
Drawn by:	
R&D CHK:	TITLE: SM-A716U
DOC CTRL CHK:	
MFG ENGR CHK:	
QA CHK:	

Size:

Changed by:	Date Changed:	Time Changed:	REV	Drawing Number:	Page:
user118					3

SAMSUNG CONFIDENTIAL
THIS DOCUMENT CONTAINS CONFIDENTIAL
PROPRIETARY INFORMATION THAT IS
SAMSUNG ELECTRONICS CO'S PROPERTY.
DO NOT DISCLOSE TO OR DUPLICATE FOR OTHERS
EXCEPT AS AUTHORIZED BY SAMSUNG.

SM7250
(INTERFACE, GPIO)

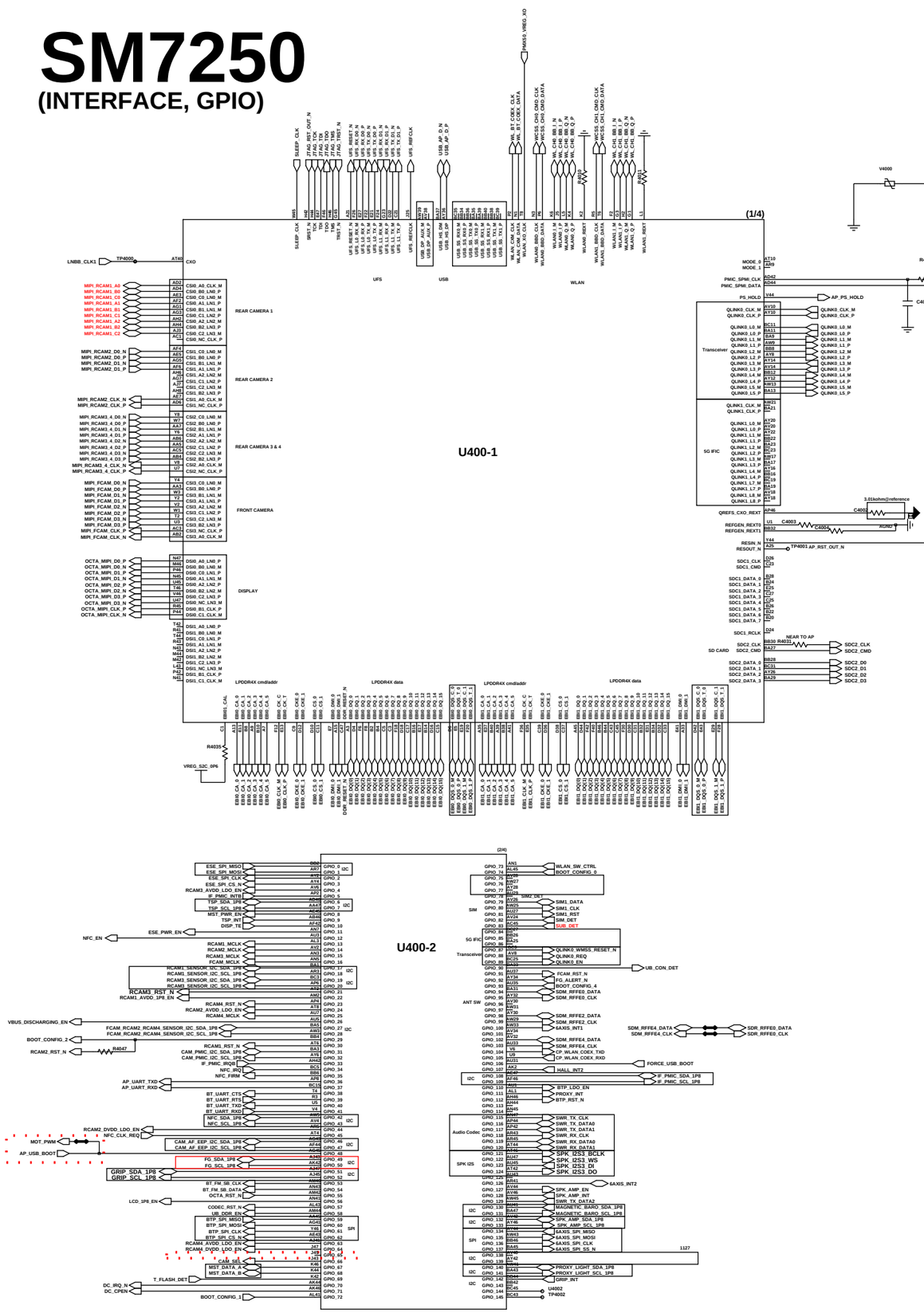

I2C PULL UP

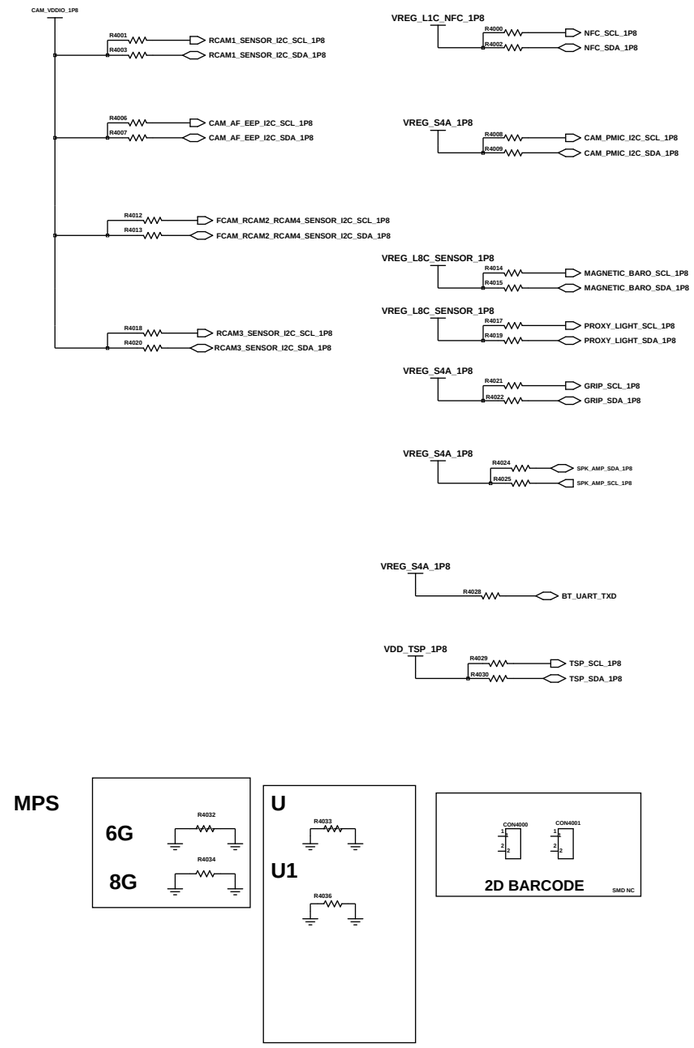

MPS

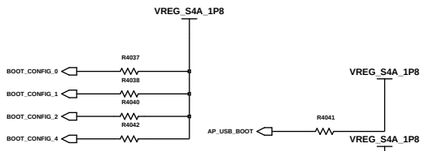

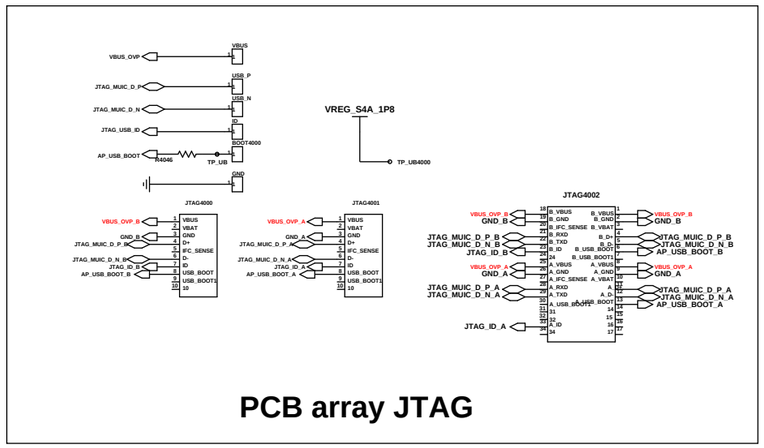

PCB array JTAG

Engineer:			
Drawn by:			
R&D CHK:		TITLE:	Size
DOC CTRL CHK:		SM-A716U	
MFG ENGR CHK:			
QA CHK:		Drawing Number	

Changed by: | Date Changed: | Time Changed:

SAMSUNG CONFIDENTIAL
THIS DOCUMENT CONTAINS CONFIDENTIAL PROPRIETARY INFORMATION THAT IS SAMSUNG ELECTRONICS CO'S PROPERTY. DO NOT DISCLOSE TO OR DUPLICATE FOR OTHERS EXCEPT AS AUTHORIZED BY SAMSUNG.

SM7250
(POWER, GND)

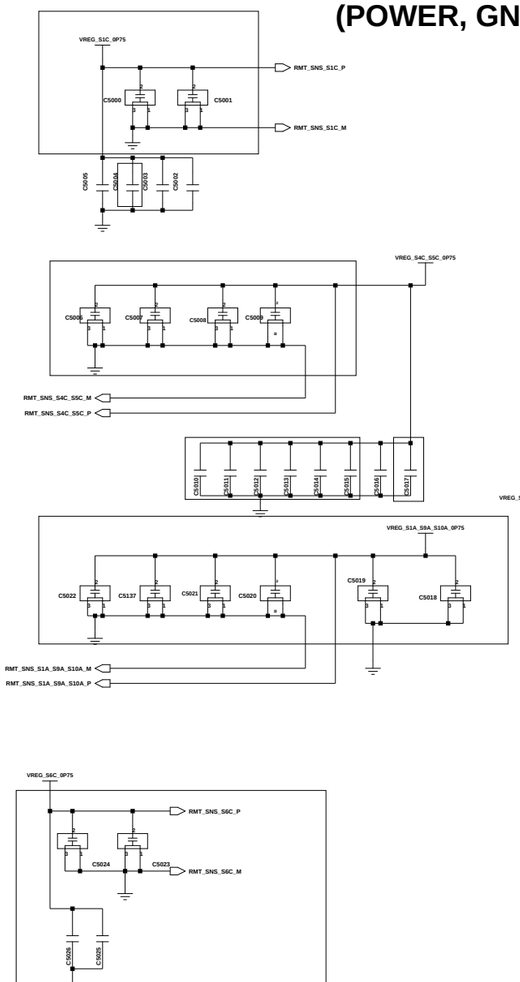

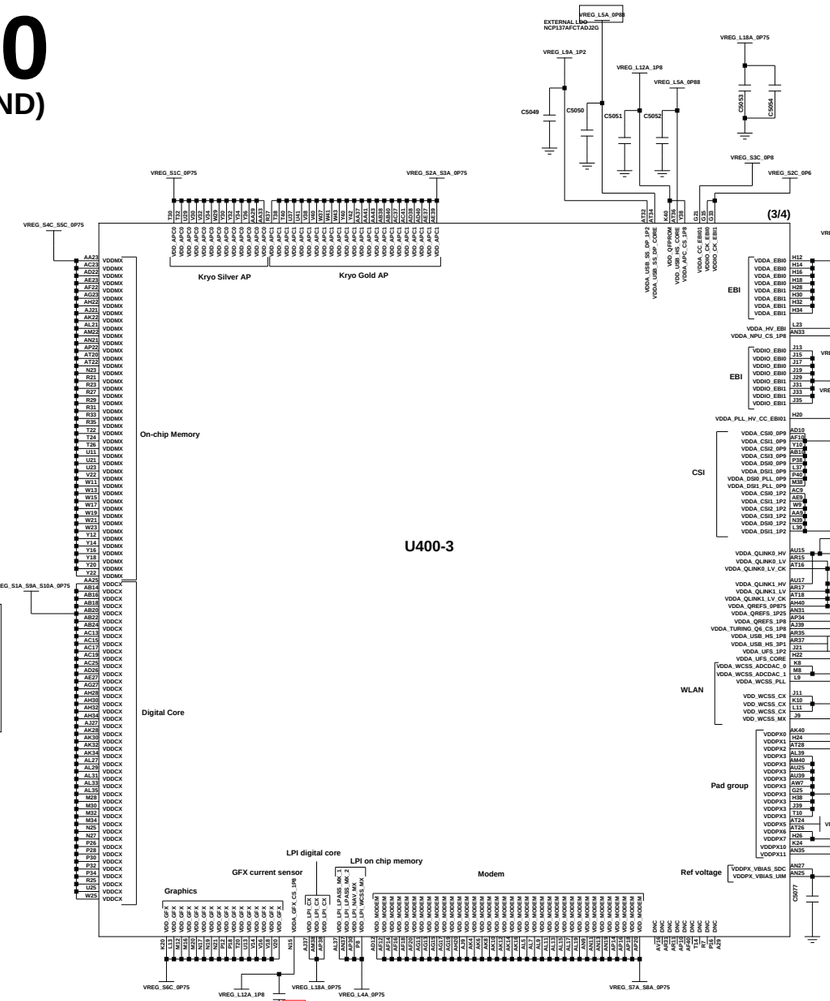

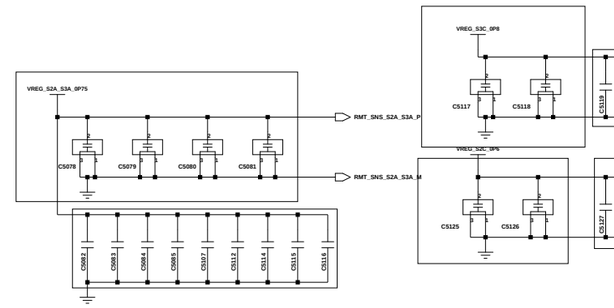

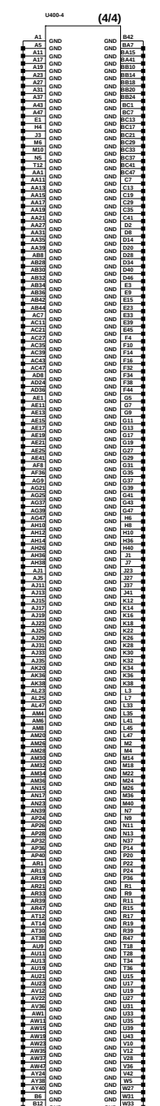

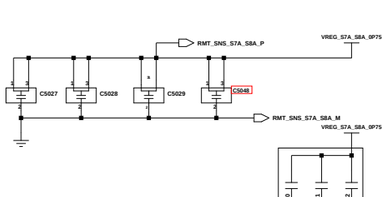

CAUTION: PLACEMENT
Near to TP AP_USB_BOOT

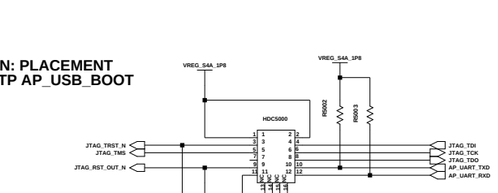

(1nF/25V/0603/2203-006400)

JTAG CONNECTOR
(3711-001713 / AXE612124)

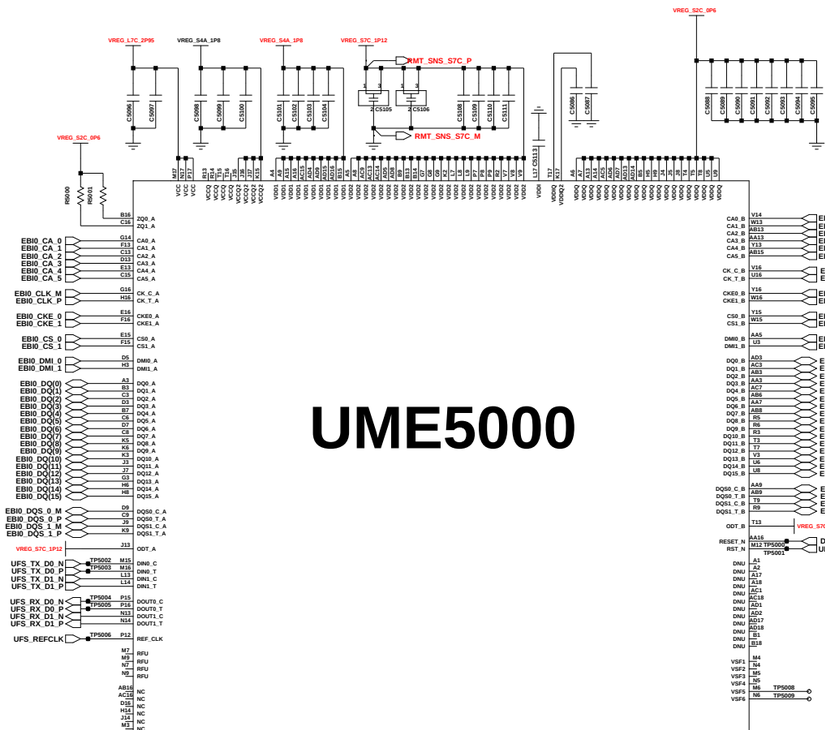

Engineer:					
Drawn by:					
R&D CHK:	TITLE:				Size:
DOC CTRL CHK:	SM-A716U				
MFG ENGR CHK:					
Changed by:	Date Changed:	Time Changed:	Q/A CHK:	REV	Drawing Number:	Page:

SAMSUNG CONFIDENTIAL
THIS DOCUMENT CONTAINS CONFIDENTIAL
AND PROPRIETARY INFORMATION OF
SAMSUNG ELECTRONICS CO'S PROPERTY.
DO NOT DISCLOSE TO OR DUPLICATE FOR OTHERS
EXCEPT AS AUTHORIZED BY SAMSUNG.

POWER (PM7250,PM7150A)

H/W ID table

HW ID	Rev	Value	Code
03	Bring-up	18K	
04	Current	22K	2007-007311
05	REV01	30K	2007-008275
06	REV02	39K	2007-007134
07	REV03	47K	2007-007139
08		56K	
09	REV04	68K	2007-007589
10	REV05	82K	2007-007590
11	REV06	100K	2007-007107
12	REV07	120K	2007-008167
13	REV08	150K	2007-007489

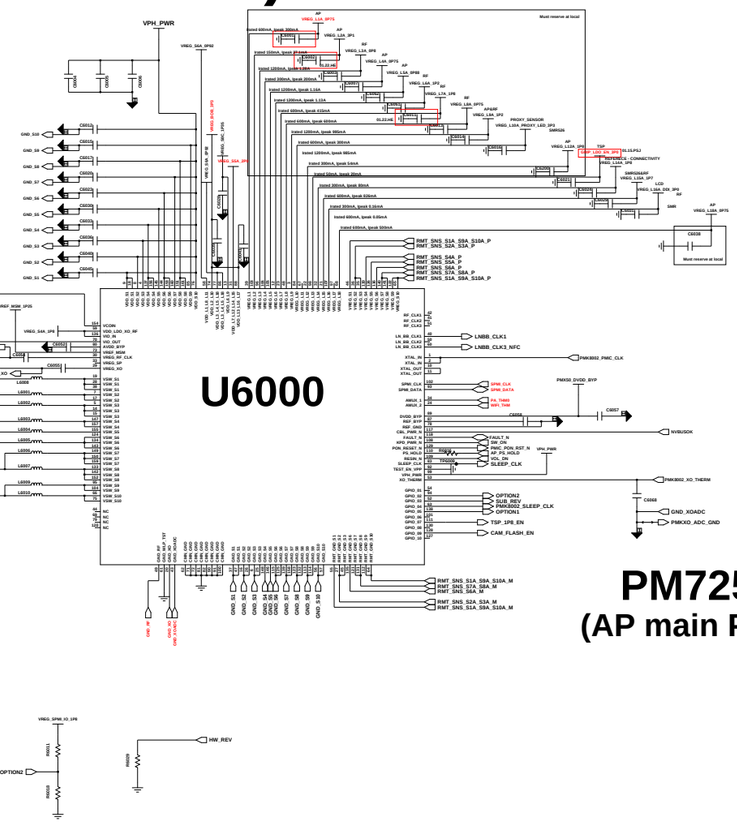

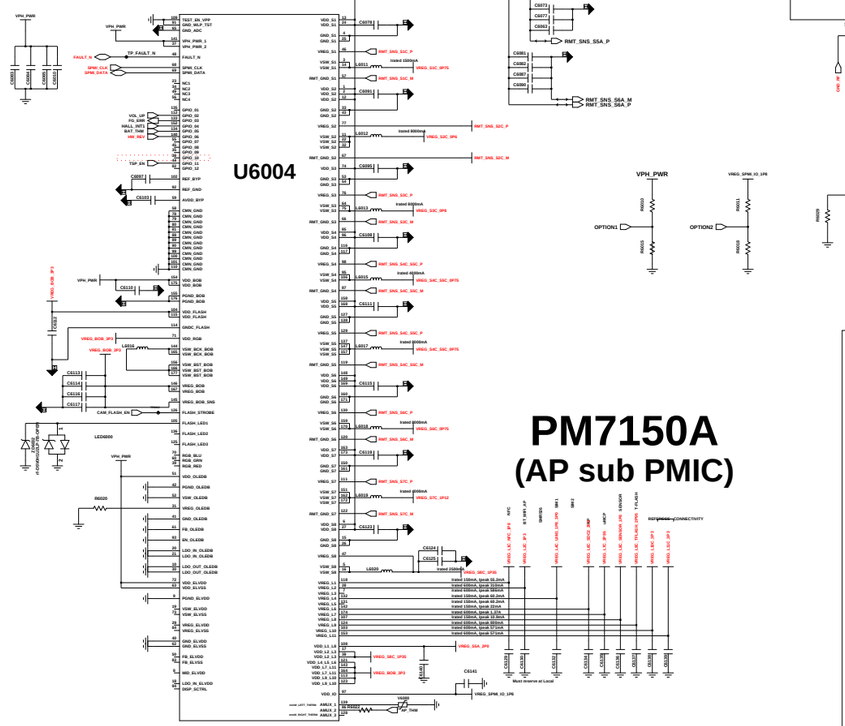

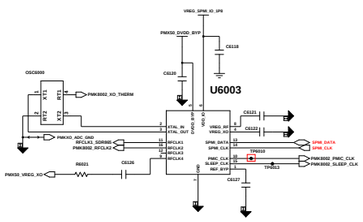

IF PMIC (MU106)

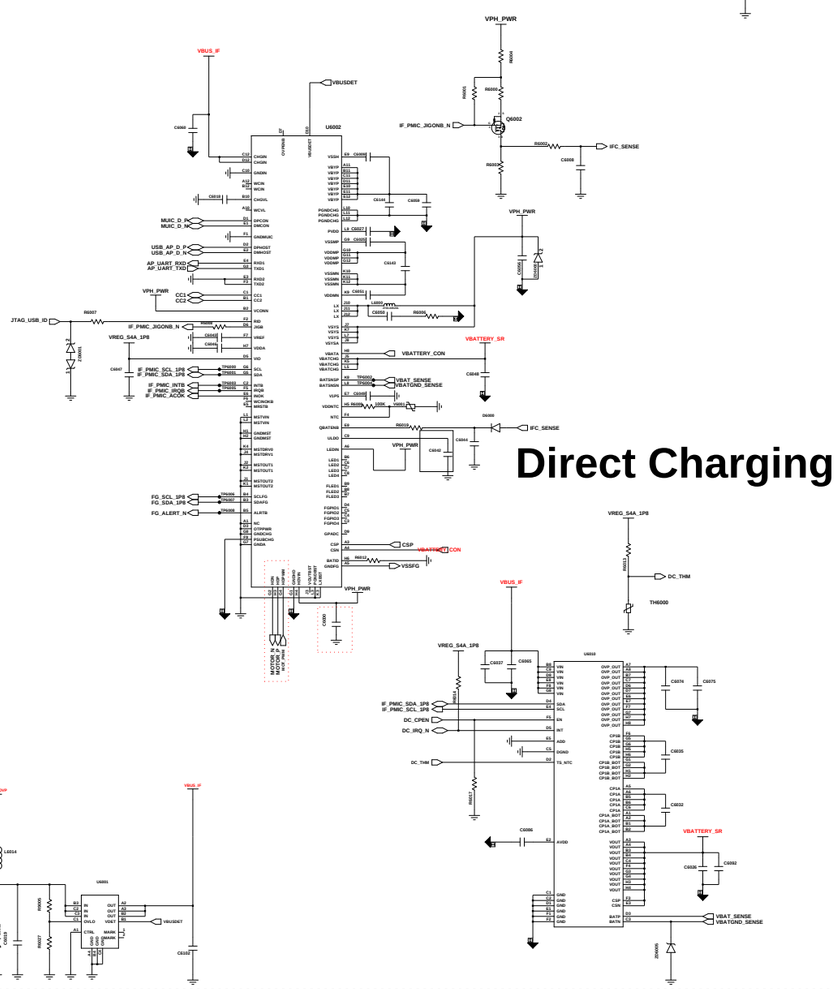

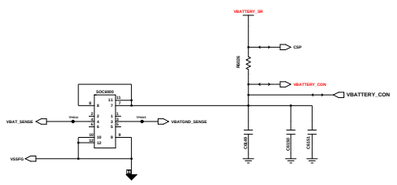

Battery Connector

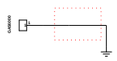

CAMERA DECO

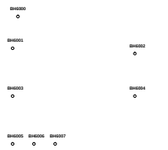

BOSS HOLE

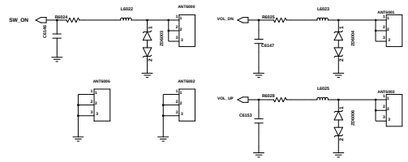

POWER & VOL KEY

MOTOR

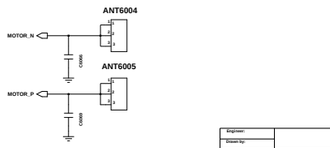

Engineer:	
Drawn by:	
R&D CHK:	
DOC CTRL CHK:	
MFG DOCS CHK:	
TITLE:	SM-A716U
Size	
Changed by:	Date Changed:	Time Changed:	Q/A CHK:	REV	Drawing Number:

SAMSUNG CONFIDENTIAL
THIS DOCUMENT CONTAINS CONFIDENTIAL PROPRIETARY INFORMATION THAT IS SAMSUNG ELECTRONICS CO'S PROPERTY. DO NOT DISCLOSE TO OR DUPLICATE FOR OTHERS EXCEPT AS AUTHORIZED BY SAMSUNG.

AUDIO & SENSOR PART

CHANGE TO WCD9380/9385

Audio Codec

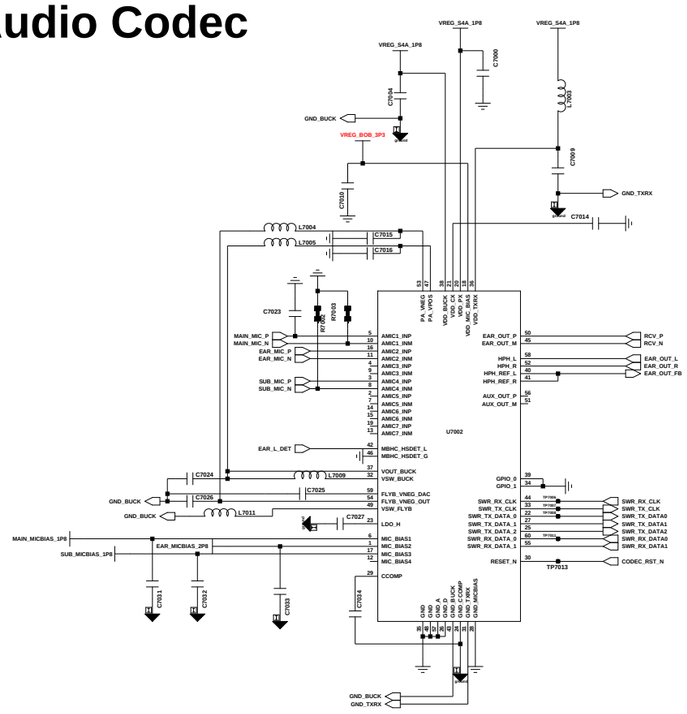

SPK AMP

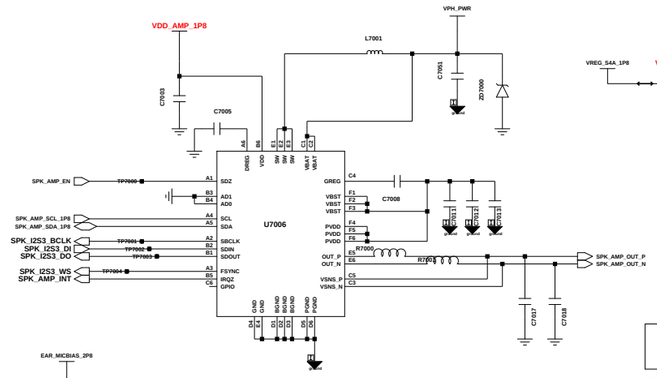

2nd MIC

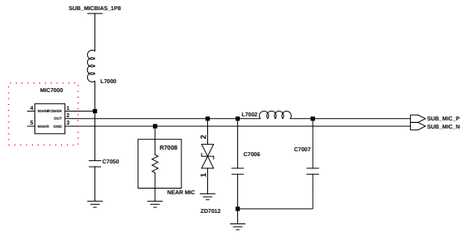

RCV CONTACT

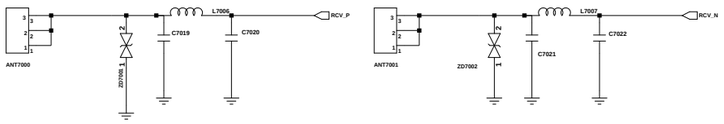

EAR MIC

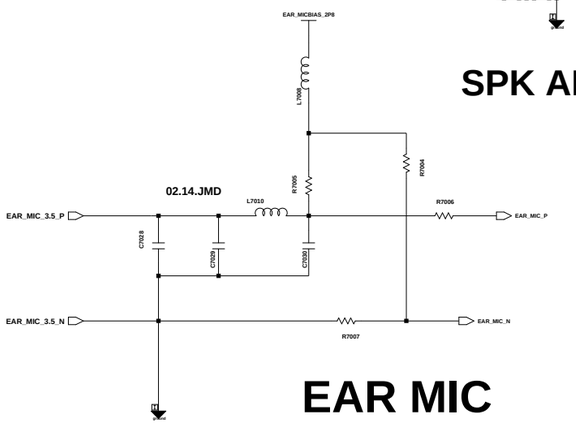

SENSOR

DUAL SIM / T-FLASH (3in2)

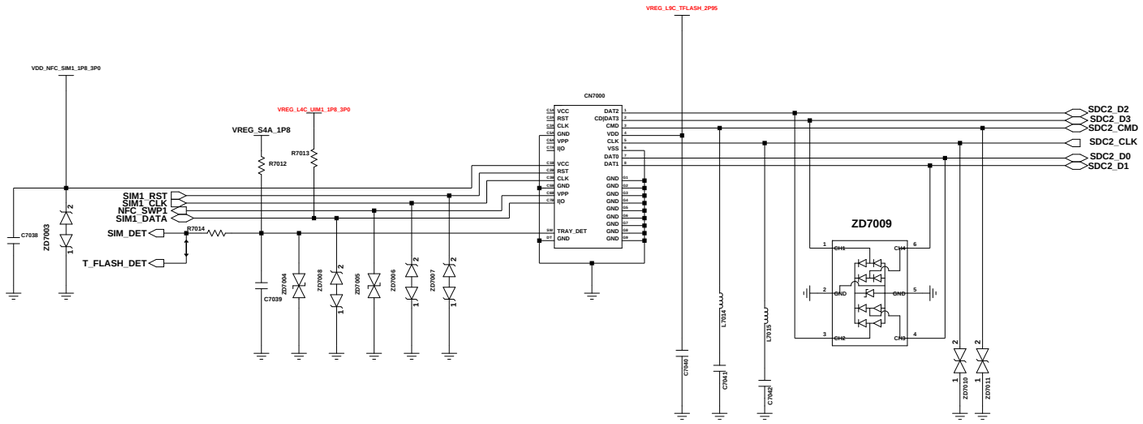

Proxy + RGB Sensor

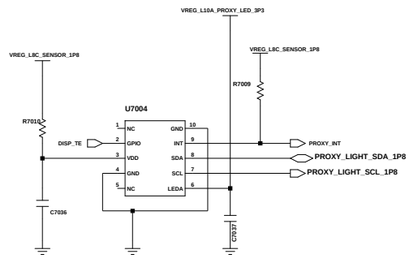

HALL_IC

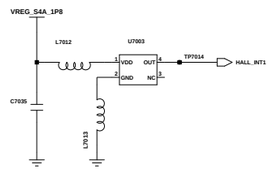

ACC&GYRO SENSOR

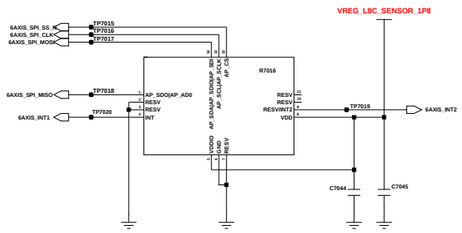

MAGNETIC SENSOR

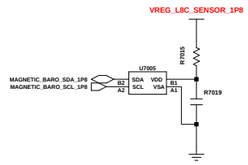

Engineer:	
Drawn by:	
R&D CHK:	TITLE: SM-A716U
DOC CTRL CHK:	Size:
MFG ENGR CHK:	
QA CHK:	REV / Drawing Number: / Page:

Changed by: | Date Changed: | Time Changed:

SAMSUNG CONFIDENTIAL
THIS DOCUMENT CONTAINS CONFIDENTIAL
PROPRIETARY INFORMATION THAT IS
SAMSUNG ELECTRONICS CO'S PROPERTY.
DO NOT DISCLOSE TO OR DUPLICATE FOR OTHERS
EXCEPT AS AUTHORIZED BY SAMSUNG.

CAMERA

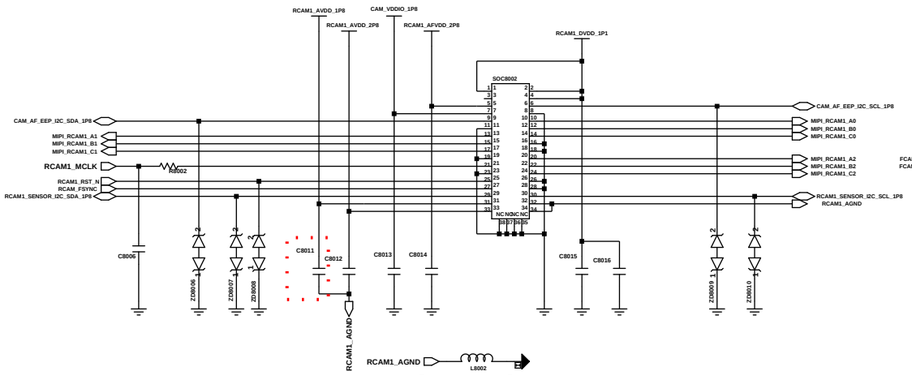

RCAM1_64M CAMERA(34PIN)

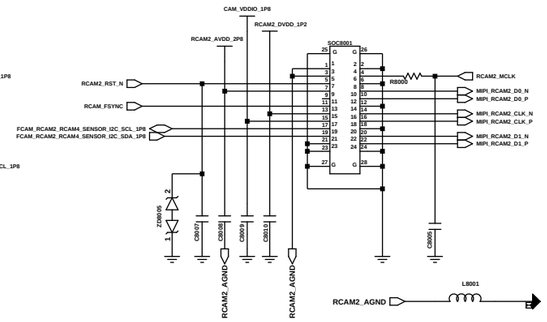

RCAM2_5M CAMERA(24PIN)

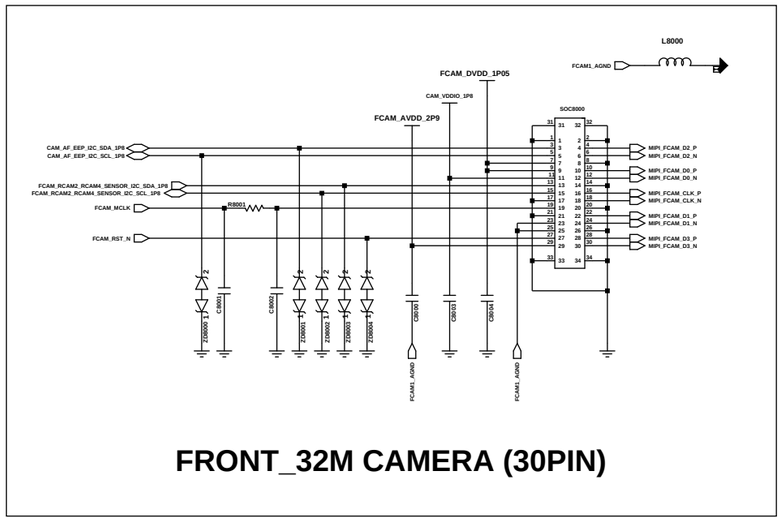

FRONT_32M CAMERA (30PIN)

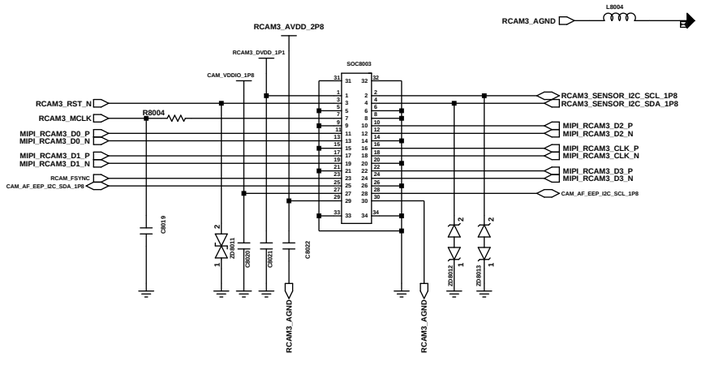

RCAM3_SUPER WIDE_12M CAMERA(30pin)_Hi1336

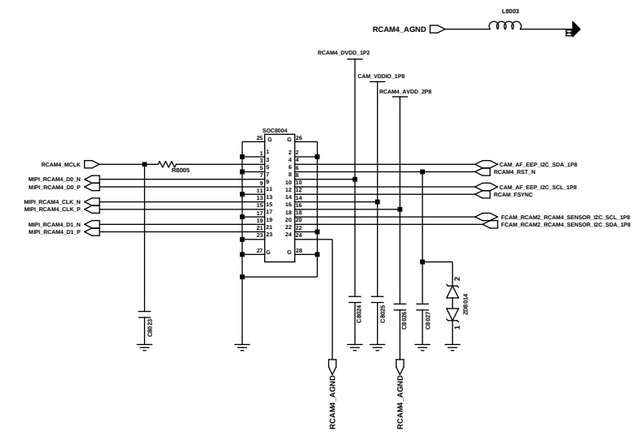

RCAM4_5M CAMERA(24PIN)

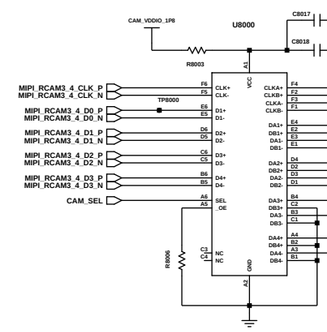

MIPI SWITCH (RCAM3,RCAM4)

MIPI SWITCH changed(0813)

CAM PMIC

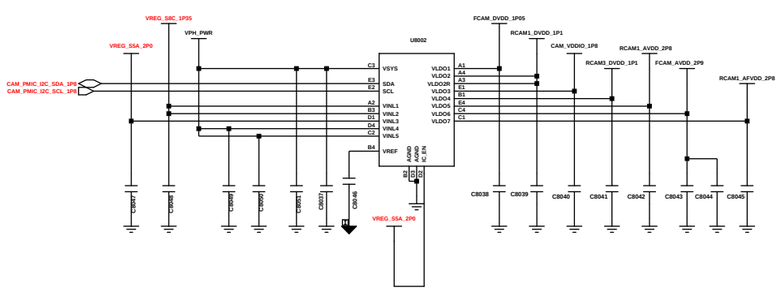

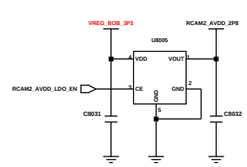

RCAM2_AVDD

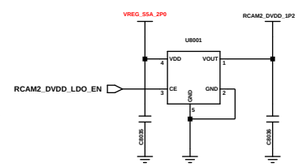

RCAM2_DVDD

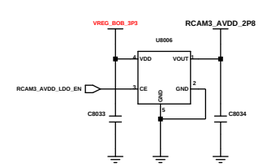

RCAM3_AVDD

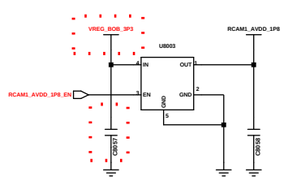

RCAM1_AVDD

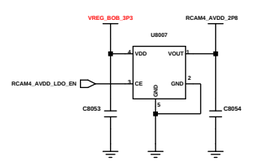

RCAM4_AVDD

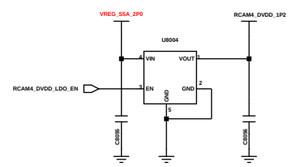

RCAM4_DVDD

Engineer:	CAMERA, DISPLAY, MHL
Drawn by:	
R&D CHK:	TITLE: SM-A716U
DOC CTRL CHK:	
MFG ENGR CHK:	
QA CHK:	

Changed by: | Date Changed: | Time Changed: | REV | Drawing Number: | Size | Page: 78

SAMSUNG CONFIDENTIAL
THIS DOCUMENT CONTAINS CONFIDENTIAL PROPRIETARY INFORMATION THAT IS SAMSUNG ELECTRONICS CO'S PROPERTY. DO NOT DISCLOSE TO OR DUPLICATE FOR OTHERS EXCEPT AS AUTHORIZED BY SAMSUNG.

C2C (Conn to Conn FPCB)

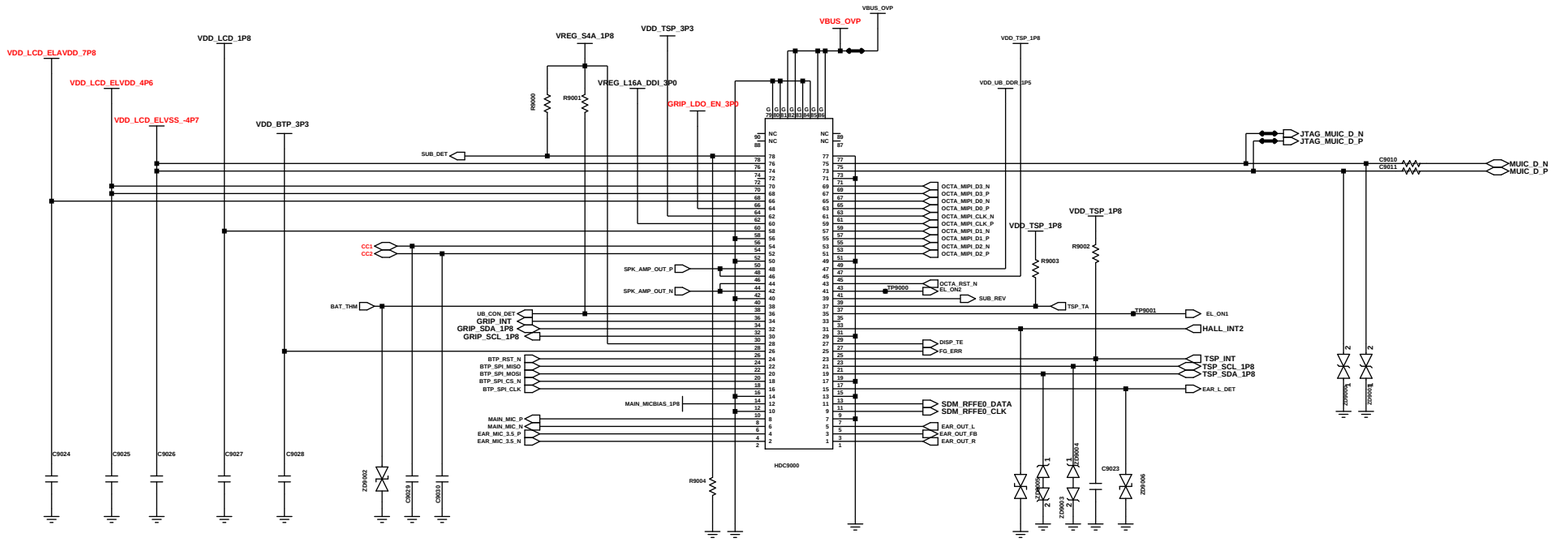

DISPLAY

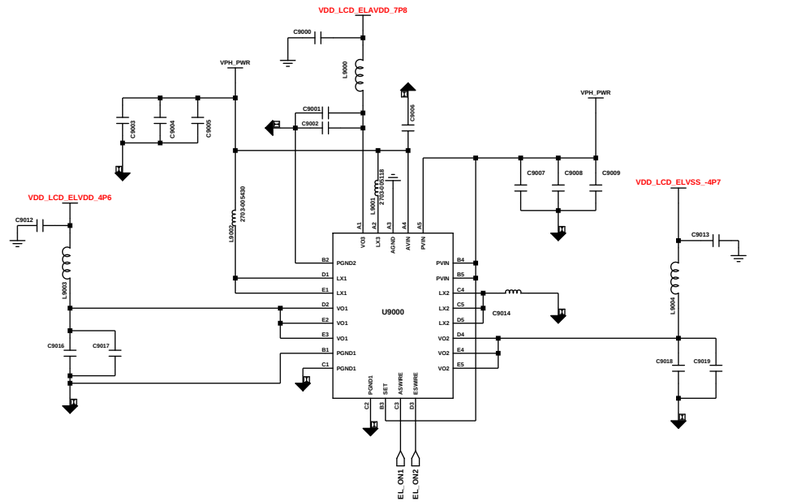

DISPLAY PMIC

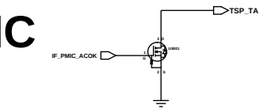

TSP LDO

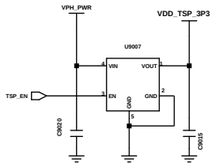

FOD LDO

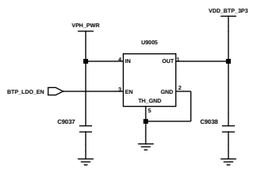

VDD_LCD_1P8

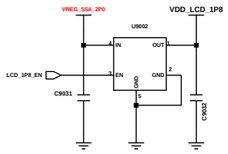

VDD_UB_DDR_1P5

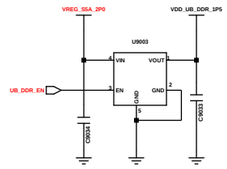

SHIELD CAN/BOTH HOLE

AP

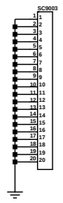

PMIC

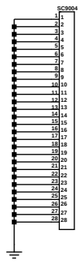

RF

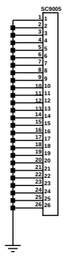

RF2

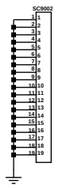

ET

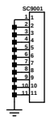

RF3

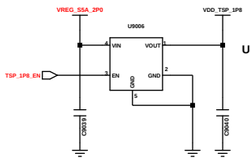

U9006 need to change 1203-008984

VDD_TSP_1P8

Engineer:	SAMSUNG ELECTRONICS
Drawn by:	
R&D CHK:	TITLE: SM-A716U
DOC CTRL CHK:	
MFG ENGR CHK:	
QA CHK:	REV: Drawing Number: Page:

Changed by: user20 | Date Changed: Thursday, June 18, 2015 | Time Changed: 10:18:28 am

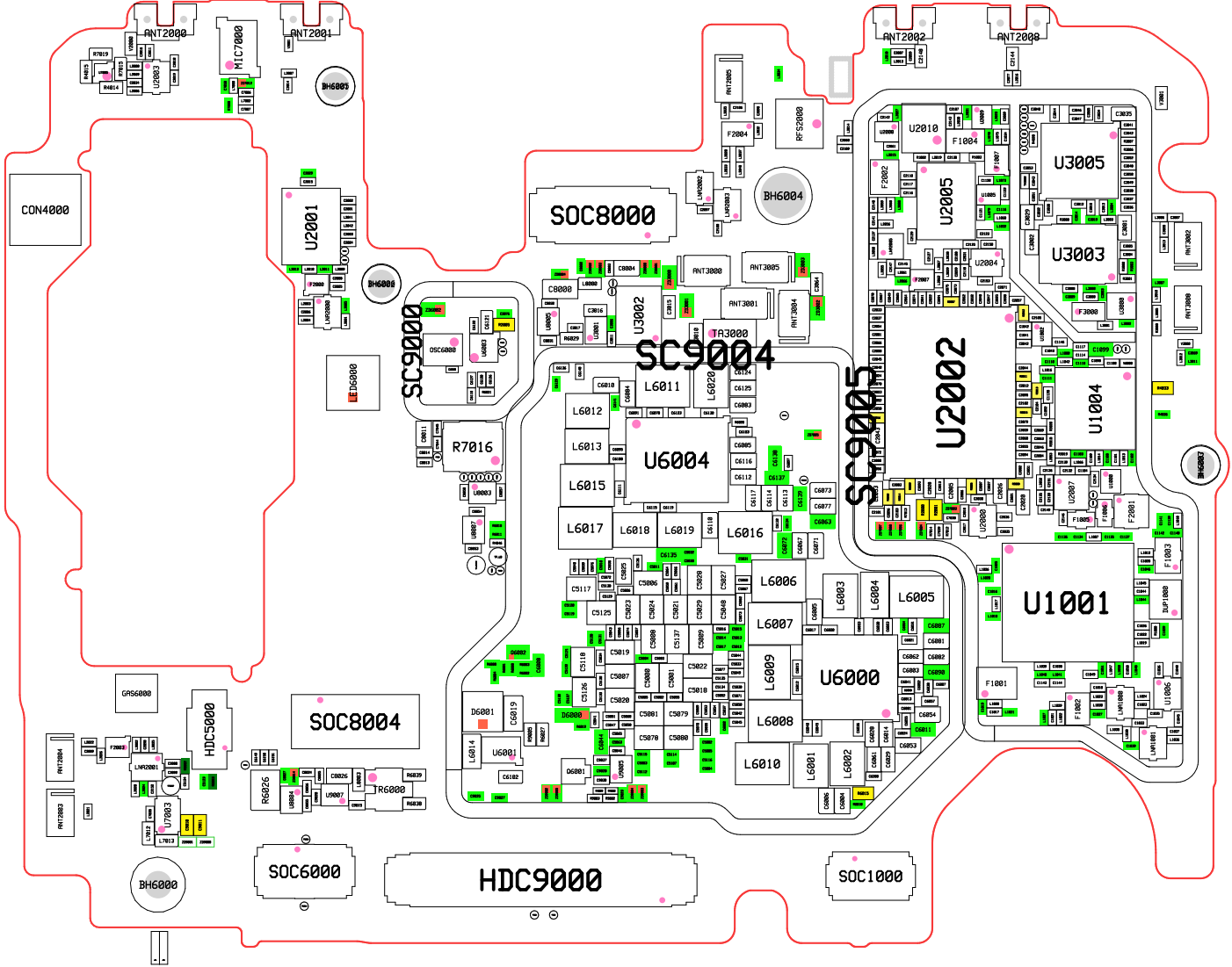
ANT2000
MIC7000
ANT2001
BH6005
CON4000
U2001
BH6006
SC9000
OSC6000
LED6000
R7016
U6003
SOC8000
ANT3000
ANT3005
ANT3001
ANT3004
U3002
TA3000
SC9004
L6011
L6020
L6012
L6013
U6004
L6015
L6017
L6018
L6019
L6016
L6006
L6003
L6004
L6005
L6007
L6009
U6000
L6008
L6010
L6001
L6002
D6001
L6014
U6001
D6000
D6001
ANT2005
F2004
RFS2000
BH6004
ANT2002
ANT2008
U2010
F1004
U2005
U2004
F2002
U3005
U3003
F3000
ANT3002
ANT3008
SC9005
U2002
U1004
U2007
U2008
F1005
F1002
F2001
U1001
F1003
DUP1000
F1001
U1005
LMR1000
LMR1001
BH6007
GAS6000
HDC5000
ANT3004
ANT3003
LMR2001
U7003
L7013
SOC8004
R6026
U8004
C8026
U9007
R6000
R6039
R6030
BH6000
SOC6000
HDC9000
SOC1000

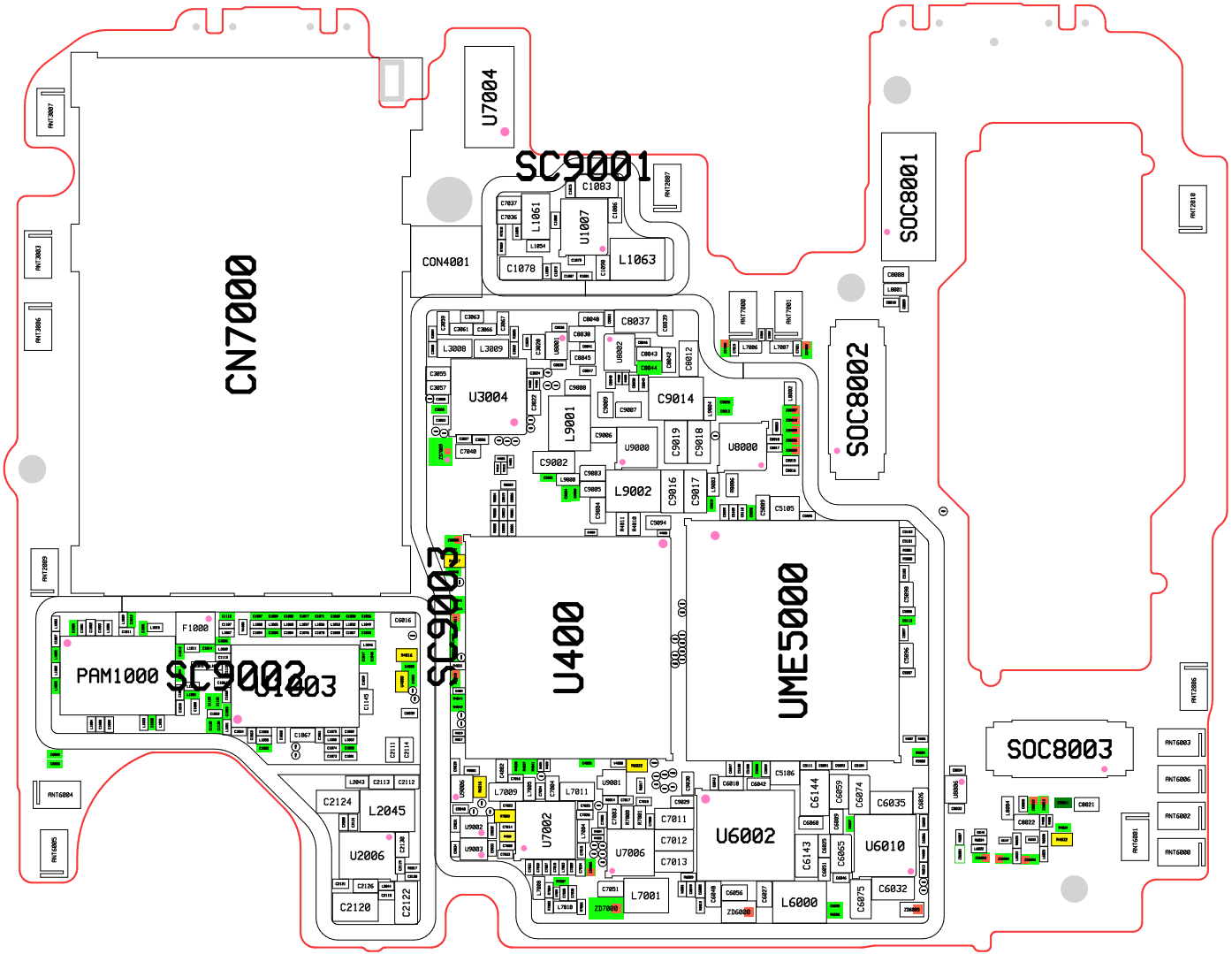
CN7000
U7004
SC9001
C1083
C7037
C7036
L1061
U1007
L1054
C1078
L1063
CON4001
SOC8001
SOC8002
SOC8003
U3004
L3008
L3009
C8037
C9014
L9001
C9002
U9000
C9019
C9018
U8000
L9002
C9016
C9017
C5105
U400
UME5000
PAM1000
SC9002
U1003
F1000
C6016
C1145
C1067
C2124
L2045
U2006
C2120
C2122
L7009
U7002
L7011
U9001
U9002
U9003
U7006
C7011
C7012
C7013
U6002
C6144
C6059
C6074
C6035
C6143
C6065
U6010
C6032
C6075
L6000
L7001
C7051
ZD7000
ZD6000
C6056
C6027
C6040
C6010
C5042
C5106
C6029
C6028
C6084
C7002
C7003
C7004
C7005
C7006
C7007
C7008
C7009
C7010
C7011
C7012
C7013
C7014
C7015
C7016
C7017
C7018
C7019
C7020
C7021
C7022
C7023
C7024
C7025
C7026
C7027
C7028
C7029
C7030
C7031
C7032
C7033
C7034
C7035
C7036
C7037
C7038
C7039
C7040
C7041